Cisterna Ceramic Sink - CCK110-13WH | 126.0066.136



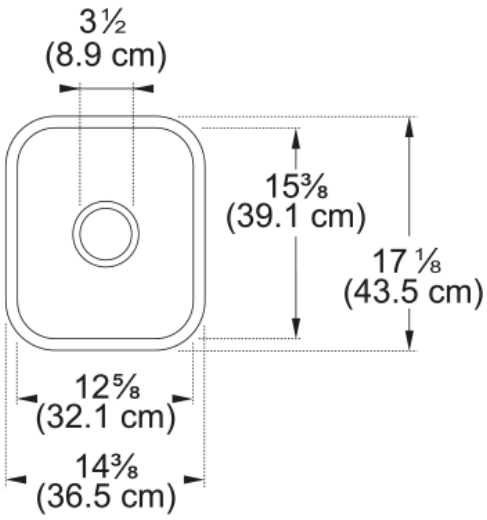

14.38-in. x 17.12-in. Undermount Ceramic Single Bowl Kitchen Sink in White. Created with Villeroy & Boch a classic design offered in three sizes, the Cisterna fireclay sink is a perfect fit for the kitchen and beyond. Use the smallest size as a bar or prep sink or pair it with a larger size to create a unique side-by-side two bowl design. The CeramicPlus finish protects the sink from stains and cleans up easily with soap and water.

Aspect	
Sink type	Sink
Type of material	Fireclay
Number of bowls	1
Product finish	White
Surface finsh	Glossy
Overflow	No
Product Dimensions	
Length (right to left)	14.37
Width (front to back)	17.126
Large bowl size: right to left	12.638
Large bowl size: front to back	15.394
Large bowl: depth	7.874
Installation	
Minimum cabinet size	18''
Product specifications	
Installation type	Undermount
Drain hole	3 1/2"
Position of drainer	No drainer
Design	traditional
Product identification	
Brand	FRANKE
Product family	None
Collection	Cisterna
Certified by	IAPMO
Features	
Drainers number	No drainer

Product reversibility	Yes
Faucet ledge	No
Strainer assembly included	No
Strainer Assembly	No waste kit
Overflow	No
Number of faucet holes	No faucet hole
Soap dispenser hole	No