Maris Undermount Sink - MAG1601611LD-OYS | 125.0687.082



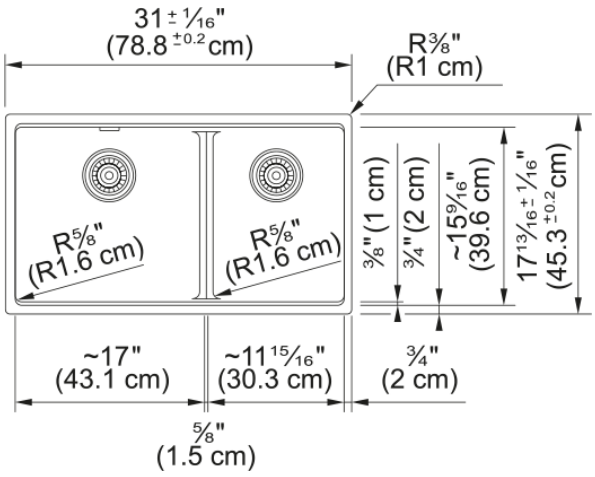

31.0-in. x 17.81-in. Undermount Fragranite Double Bowl Low-Divide Kitchen Sink in Oyster. Maris sinks are equipped with deep capacity bowls. The double bowl design allows you to multi-task with ease, while the low divide creates a larger single bowl perfect for cleaning oversized cookware and bakeware. With our easy-to-use integrated ledge system, you'll accomplish more with your sink while making the most of your surrounding counter space. The rear drain maximizes the usable surface of the bowl and creates extra cabinet space beneath the sink. Maris Fragranite sinks are scratch-resistant, fade-resistant, and impact resistant and will retain their new appearance for years.

Aspect	
Sink type	Sink
Type of material	Fragranite
Number of bowls	2
Product finish	Oyster
Surface finsh	None
Overflow	No
Product Dimensions	
Length (right to left)	31.024
Width (front to back)	17.835
Large bowl size: right to left	16.945
Large bowl size: front to back	15.606
Large bowl: depth	9.492
Small bowl size: right to left	11.984
Small bowl size: front to back	15.606
Small bowl: depth	9.492
Installation	
Minimum cabinet size	36''
Product specifications	
Installation type	Undermount
Drain hole	3 1/2"
Position of drainer	No drainer
Active Twist Compatibility	No
Installation device	Clamp Bag
Design	contemporary
Product identification	

Brand	FRANKE
Product family	Maris
Collection	Maris
Certified by	IAPMO
Features	
Drainers number	No drainer
Product reversibility	No
Faucet ledge	No
Strainer assembly included	No
Strainer Assembly	No waste kit
Overflow	No
Number of faucet holes	No faucet hole
Soap dispenser hole	No
Minimum worktop thickness	20 mm