Professional 2.0 Sink - PS2X110-21 | 122.0530.923

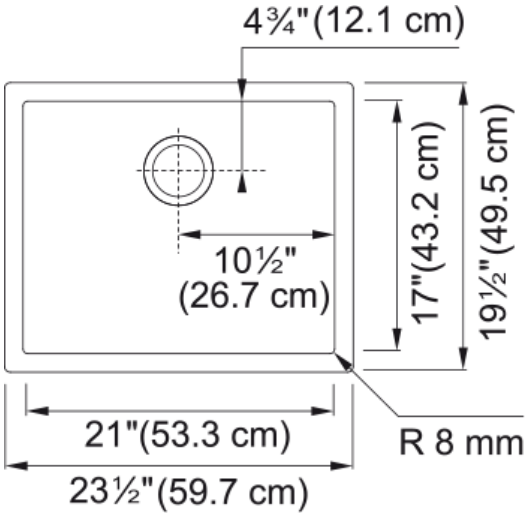

Technical Data

Aspect	
Sink type	Sink
Type of material	Stainless steel
Number of bowls	1
Color	Steel
Surface finsh	Pearl
Product Dimensions	
Exterior size: right to left	23.504
Exterior size: front to back	19.488
Large bowl size: right to left	21
Large bowl size: front to back	17
Large bowl: depth	10
Installation	
Minimum cabinet size	27''
Product specifications	
Installation type	Undermount
Drain hole	3 1/2"
Position of drainer	No drainer
Product identification	
Product brand	FRANKE
Product family	None
Collection	Professional Series
Certified by	IAPMO
Features	
Drainers number	No drainer
Product reversibility	No
Faucet ledge	No
Strainer assembly included	No

Strainer assembly type	No waste kit
Overflow	No
Number of faucet holes	No faucet hole
Soap dispenser hole	No