Cube Undermount Sink - CUX11030 | 122.0371.978



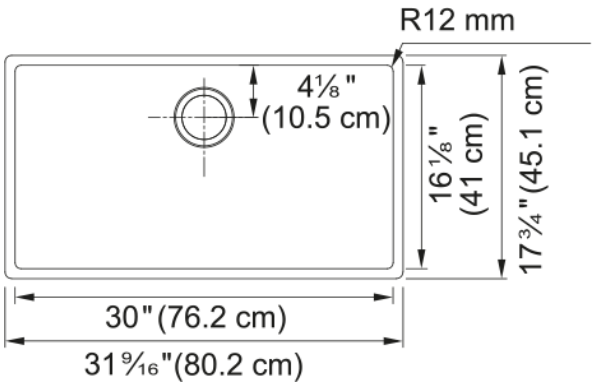

Elevate your kitchen experience with the Cube Series from Franke - a hand-crafted undermount sink collection that seamlessly marries Swiss precision with contemporary elegance. Our Cube sinks redefine sophistication with a smooth bowl design, providing a clean, modern aesthetic that effortlessly complements your kitchen decor. The easy-to-clean Pearl finish enhances the sink's visual appeal and simplifies maintenance, resisting stains and water spots for a lasting, pristine shine. Transform your kitchen into a haven of style and functionality with the Cube Series - where precision, design, and ease-of-use converge for an exceptional sink experience.

Aspect	
Sink type	Sink
Type of material	Stainless steel
Number of bowls	1
Product finish	Steel
Surface finsh	Pearl
Overflow	No
Product Dimensions	
Length (right to left)	31.496
Width (front to back)	17.756
Large bowl size: right to left	30
Large bowl size: front to back	16.142
Large bowl: depth	9.016
Installation	
Minimum cabinet size	36''
Product specifications	
Installation type	Undermount
Drain hole	3 1/2"
Position of drainer	No drainer
Bowl 1: accessory ledge	no
Active Twist Compatibility	No
Design	contemporary
Product identification	
Brand	FRANKE
Product family	Maris
Collection	Cube

Certified by	IAPMO
Features	
Drainers number	No drainer
Product reversibility	No
Faucet ledge	No
Strainer assembly included	No
Strainer Assembly	No waste kit
Overflow	No
Number of faucet holes	No faucet hole
Soap dispenser hole	No