3/4 HP Food Waste Disposer - KWD75B1-EZ | 134.0275.324

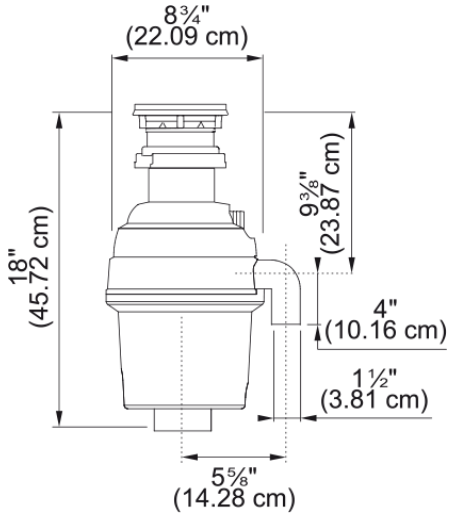

Technical Data

Aspect	
Product type	Food waste disposer
Energy specifications	
Voltage	110 V
Product identification	
Product brand	KINDRED
Collection	Disposer
Features	
Horsepower	3/4 HP