Brookmore Undermount Sink - BSU1832-9 | 122.0637.645

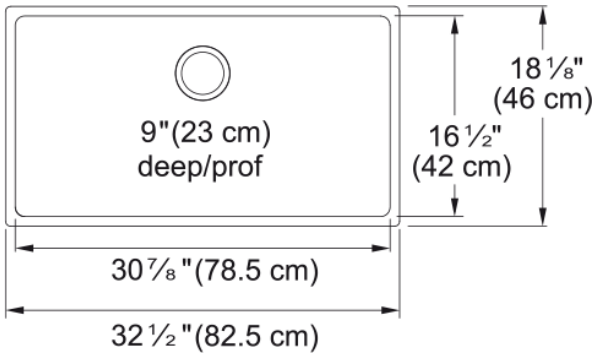

Technical Data

Aspect	
Sink type	Sink
Type of material	Stainless steel
Number of bowls	1
Color	Steel
Surface finsh	Pearl
Product Dimensions	
Exterior size: right to left	32.48
Exterior size: front to back	18.11
Large bowl size: right to left	30.906
Large bowl size: front to back	16.535
Large bowl: depth	9
Installation	
Minimum cabinet size	33''
Product specifications	
Installation type	Undermount
Drain hole	3 1/2"
Position of drainer	No drainer
Product identification	
Product brand	KINDRED
Collection	Brookmore
Certified by	IAPMO
Features	
Drainers number	No drainer
Product reversibility	No
Faucet ledge	No
Strainer assembly included	Yes
Strainer assembly type	Manual

Overflow	No
Number of faucet holes	No faucet hole
Soap dispenser hole	No