Atlas Neo Hot/Cold Filtered - ATL-HC-304 | 120.0685.382

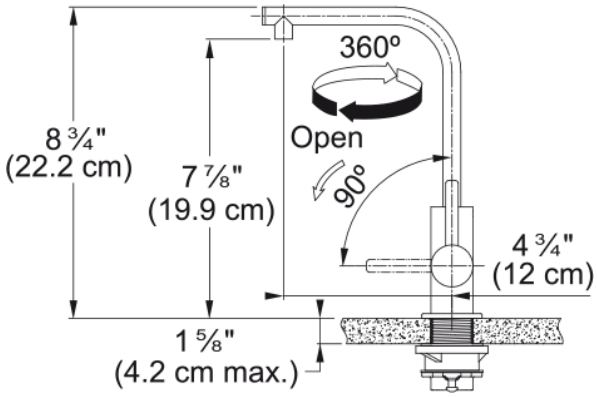

Technical Data

Aspect	
Spout type	L - spout
Color	Stainless steel
Type of material	Stainless steel 304
Product Dimensions	
Faucet hole diameter	31,75 mm
Cartridge dimension	12,70 mm
Installation	
Mounting type	Shank
Water supply hose connection	3/8"
Water supply hose length	1524 mm
Product specifications	
Pressure	High pressure
Faucet type	Swivel spout
Faucet operation	Side lever
Faucet rotation	360°
Product identification	
Product brand	FRANKE
Product family	None
Collection	ATLAS NEO
Features	
Water saving feature	No
Type of aerator	Laminar
Little butler type	Heating tank
Little butler type	Water filtration
Little butler type	Chilling tank