Maris Single Bowl Sink MRG210-37BSG | 135.0669.712

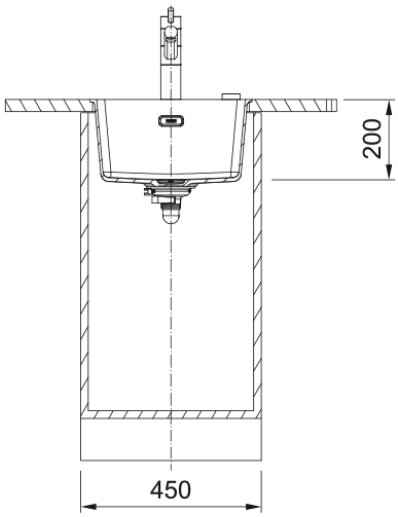

Technical Data

Aspect	
Sink type	Bowl (no drainer)
Material type	Granite
Number of bowls	1
Colour	Stone grey
Finish	None
Dimensions	
Overall length	403.0
Overall depth	433.0
Length	370.0
Depth	400.0
Height	200.0
Installation	
Cabinet size	45 cm
Product features	
Installation type	Flushmount
Installation type	Undermount
Waste outlet	3 1/2"
Position of drainer	No drainer
Product identification	
Brand	FRANKE
Product family	Maris
Range	Maris
Approval logo	CE
Approval logo	UKCA
Properties	
Drainer	No drainer
Reversible	No

Tap ledge	No
Waste kit	Yes
Waste kit type	Manual
Plumbing kit	No
Tap holes	No tap hole
Soap dispenser hole	No