Atlas Neo Retractable | 115.0681.242



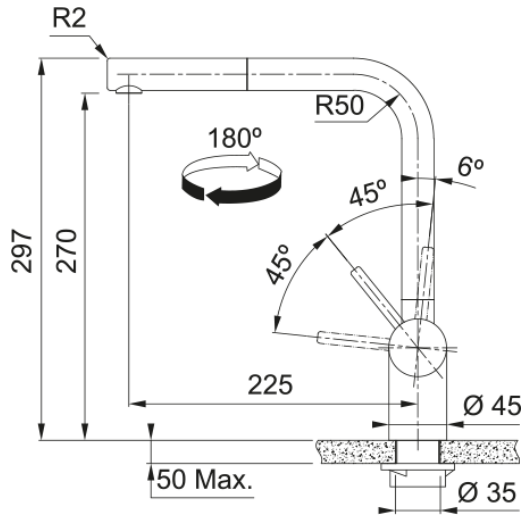

Atlas Neo Pull-Out Nozzle Gold, Overall height 297mm. Side Lever, Ceramic Mechanism, Perlator, High Pressure Pull-Out Nozzle feature.5 Year warranty on body construction.

Product Information	
Spout version	L - spout
Color	Gold
Type of material	Stainless steel 304
Flexible pullout hose material	Nylon grey
Shower material	stainless steel
Dimensions	
Tap hole diameter	35mm
Cartridge dimension	35 mm
Height overall	297.0
Installation	
Fixation type	shank
Water supply hose connection	3/8"
Water supply hose length	450 mm
Product specifications	
Pressure	High Pressure
Version	Pull out
Tap operation	side lever
Tap rotation	180°
Mixed water flowrate @3bars	8.94
Product identification	
Product brand	FRANKE
Product family	Maris
Model range	Atlas Neo
Properties	
Eco water saving	no
Type of aerator	Laminar
Shower version	single