Nevada NDN621 | 101.0741.233



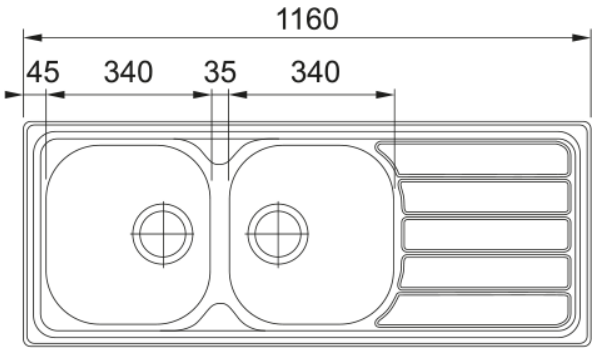

Nevada NDN621 1160x460mm, Inset, Stainless Steel, 90mm Waste. 25 Year Warranty.

Product Information	
Sink type	Sink (w/ drainer)
Type of material	Stainless Steel
Number of bowls	2
Color	steel
Finish	Unbrushed
Overflow	No
Dimensions	
External size: right to left	1160.0
External size: front to back	460.0
Bowl 1 size: right to left	343.0
Bowl 1 size: front to back	370.0
Bowl 1: depth	145.0
Bowl 2 size: right to left	343.0
Bowl 2 size: front to back	370.0
Bowl 2: depth	145.0
Cutout inset: right to left	1136.0
Cutout inset: front to back	436.0
Installation	
Minimum cabinet size	80 cm
Product specifications	
Installation type	inset
Waste outlet	3 1/2"
Position of drainer	Reversible
Active Twist Compatibility	No
Product identification	
Product brand	FRANKE
Product family	None

Model range	Nevada
Properties	
Drainers number	1
Product reversibility	yes
Tap ledge	Yes
Waste kit included	yes
Waste kit type	manual
Siphon included	no
Number of tap holes	None
Soap dispenser hole	no
Drain cover	no