Vital Capsule 3-in-1 Filter Semi-Pro CH | 120.0621.230



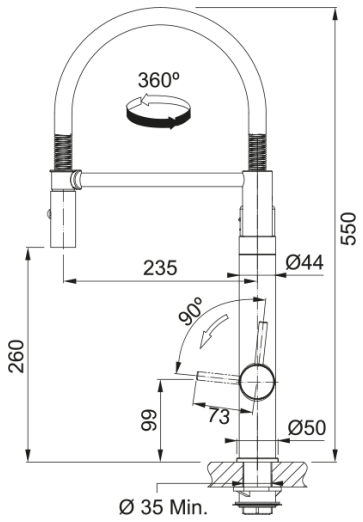

Vital Capsule 3-in-1 Filter Tap Semi-Pro, Chrome/Gunmetal finish. Overall height 550mm. 360° rotation. Minimalist, elegant, fully rotatable: the easiest way to enjoy fresh drinking water every day.The world’s most advanced water filter system cleans water more simply, quickly and reliably than ever before. Developed in Switzerland and impeccably designed. For the most wonderful tap water you’ve ever tasted. The combination of activated carbon and a high-tech membrane ensure supreme water quality and hygiene. Not only does tap water taste better, it is also much healthier. The extremely compact system looks stunning in any kitchen: an iconic design, space-saving and available in various designs and colours. The best water filter in the world is also the smallest. That’s something of a marvel, given what’s inside. It is the first system ever to combine activated carbon with a high-tech membrane and turns 500 litres of tap water into pure refreshment. All Vital taps are supplied with a High-Performance filter and also now a High- Flow filter which is a superb alternative providing continuous high flow rates in areas where the High-Performance filter can get congested prematurely due to excessive sediment contamination in the water. The High-Flow filter has a mesh size that is 20 times finer than ordinary household filters. As a result, rust, dirt and fine sediments are filtered out for cleaner water. Please note, the High-Flow filter does not remove microbial cysts, microplastics, bacteria, viruses or limescale.

Product Information	
Spout version	S - semi-professional
Color	Bi-chrome/gun metal
Type of material	Brass
Flexible pullout hose material	metal
Shower material	brass
Dimensions	
Tap hole diameter	35 mm
Cartridge dimension	35 mm
Height overall	550.0
Installation	
Fixation type	shank
Water supply hose connection	3/8"
Water supply hose length	600 mm
Product specifications	
Pressure	High Pressure
Version	Dual spray
Tap operation	Twin handle
Tap rotation	360°
Filtered water flowrate @3bars	3.5

Mixed water flowrate @3bars	7.5
Product identification	
Product brand	FRANKE
Product family	Mythos
Model range	Vital
Properties	
Eco water saving	no
Type of aerator	Aerated
Type of multifunctional system	Water filtration