SD Comfort SS Optics | 119.0578.771

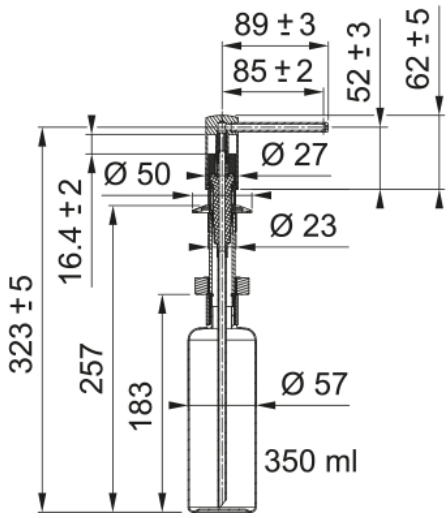

Soap dispenser Comfort SS Optics

Product Information	
Type of material	Brass
Color	SS optics
Consumable sub-category	Soap dispenser
Product identification	
Product family	None
Model range	Comfort