Icon Pull Out Jet Shower Matt Black | 115.0625.190

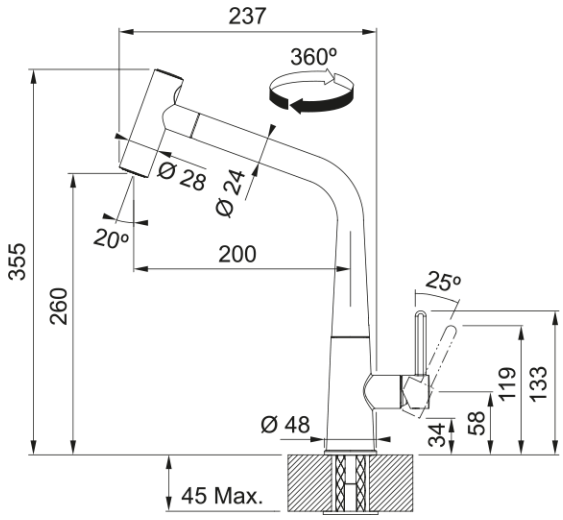

Icon Pull Out Double Jet Shower Matt Black finish, Overall height 355mm, unique pull-out lever offering single and double jets, Neoperl Laminar aerator to reduce splashing, Ceramic Mechanism. Slim body and high spout make easy work of cleaning, even larger items.

Product Information	
Spout version	L - spout
Color	Matte black
Type of material	Brass
Flexible pullout hose material	Nylon black
Shower material	brass
Dimensions	
Height overall	355.0
Tap hole diameter	35 mm
Cartridge dimension	25 mm
Installation	
Fixation type	shank
Water supply hose connection	3/8"
Water supply hose length	450 mm
Product specifications	
Pressure	High Pressure
Version	Spray
Tap operation	side lever
Tap rotation	360°
Mixed water flowrate @3bars	7.47
Product identification	
Product brand	FRANKE
Product family	Mythos
Model range	Icon
Properties	
Eco water saving	no
Type of aerator	Laminar