Maris MRG 110-37 | 125.0697.703



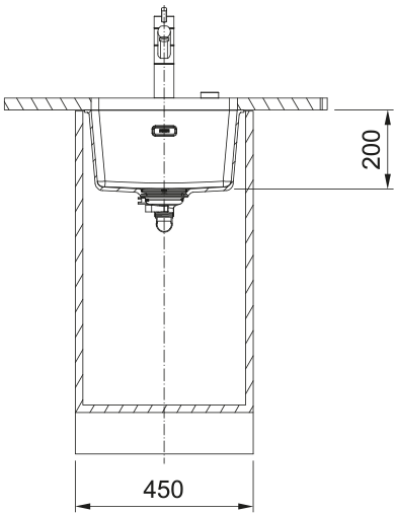

	1
	403.0
	433.0
1	370.0
1	400.0
1	200.0
	45 cm
	3 1/2"
1:	
Active Twist	
Design	contemporary
	FRANKE
	Maris
	Maris
LOGO	CE

LOGO	UKCA
Range of worktop thickness	20 mm