# MRG 110-37 3 1/2" WWK ND HOF Oatmeal | 125.0697.703



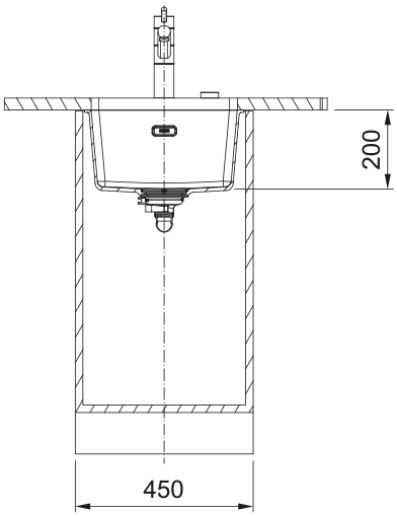


MRG 110-37 3 1/2" WWK ND HOF Oatmeal

| | |
|---|---|
| **Product Information** | |
| Sink type | Bowl (no drainer) |
| Type of material | Granite |
| Number of bowls | 1 |
| Color | Oatmeal |
| Finish | None |
| Overflow | Yes |
| **Dimensions** | |
| External size: right to left | 403.0 |
| External size: front to back | 433.0 |
| Bowl 1 size: right to left | 370.0 |
| Bowl 1 size: front to back | 400.0 |
| Bowl 1: depth | 200.0 |
| **Installation** | |
| Minimum cabinet size | 45 cm |
| **Product specifications** | |
| Installation type | undermount |
| Waste outlet | 3 1/2" |
| Position of drainer | None |
| Bowl 1: accessory ledge | no |
| Active Twist Compatibility | Yes |
| Installation device | Clamp Bag |
| Design | contemporary |
| **Product identification** | |
| Product brand | FRANKE |
| Product family | Maris |
| Model range | Maris |
| Approval logo | CE |

| | |
|---|---|
| Approval logo | UKCA |
| **Properties** | |
| Drainers number | No drainer |
| Product reversibility | no |
| Tap ledge | No |
| Waste kit included | yes |
| Waste kit type | manual |
| Siphon included | yes |
| Number of tap holes | None |
| Soap dispenser hole | no |
| Minimum worktop thickness | 20 mm |
| Drain cover | yes |