FDWF6166P1 | 117.0698.061

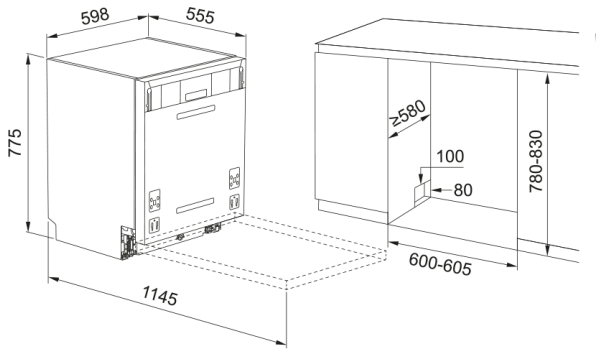

16 BLDC (+)72℃99.99%7 5 Auto PTC 1.5h 4h 4h, 24h, 72h, 168h 1-24

	598.0
	775.0
	555.0
	220 V
	50
L/cycle	8,5
	1
	3.0
	15
	7
(dB)	60