FMY 99 P XS CCC | 116.0658.667

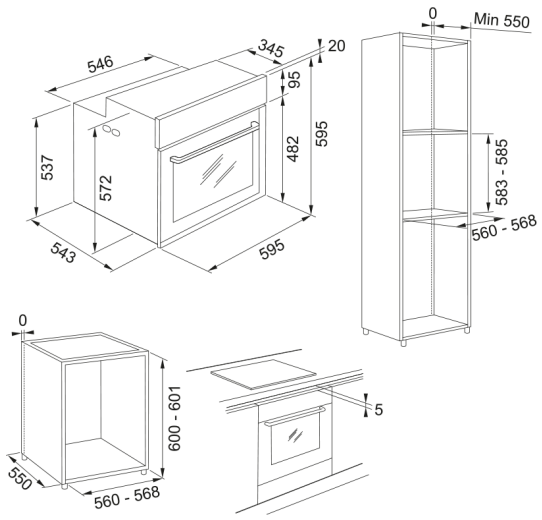

73L 5 3.5 TFT 4 GI-FAM 470° C 17 15 CookAs-sist 607

	595.0
	564.0
	595.0
	3340.0
	220 V
	50
	A+
Cookassist	
Cookassist	
Cookassist	
Cookassist	/
Cookassist	
Cookassist	
Cookassist	
Cookassist	
Cookassist	
Cookassist	
Cookassist	

Cookassist
Cookassist
Cookassist
Cookassist
Cookassist
Cookassist
Cookassist
Cookassist
Cookassist
Cookassist
Cookassist
Cookassist
Cookassist
Cookassist
Cookassist
Cookassist
Cookassist
Cookassist
Cookassist
Cookassist
Cookassist
Cookassist
Cookassist
Cookassist
Cookassist
Cookassist

4.0

650.0
690.0

	630.0
	900.0
	FRANKE
	Mythos
	Mythos
(L)	73.0
UI	
	/
	1