FBO6200BXP | 116.0647.854

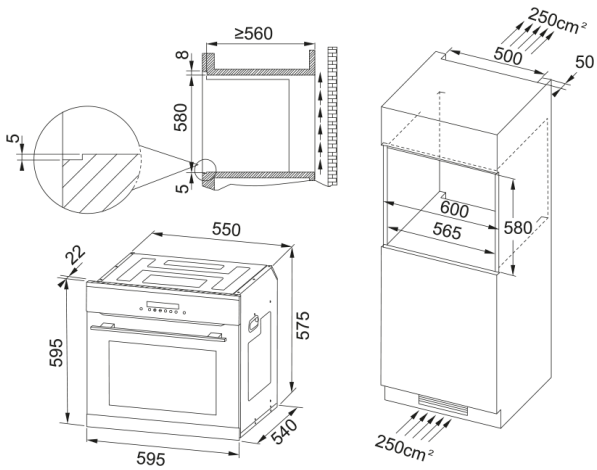

60L 5 LED 10 3LED 3LOW-E

	595.0
	550.0
	2400.0
	220 V
	50
	A+
	665.0
	695.0
	FRANKE
(L)	60.0
UI	