Tap Lina L swivel side HP DS CN | 115.0703.325

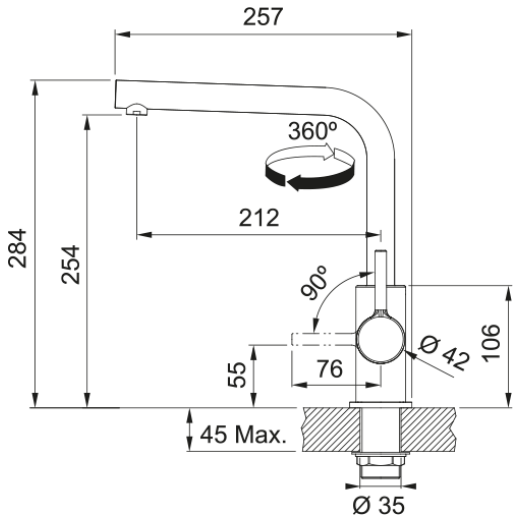

Tap Lina L swivel side HP Decor Steel CN

Product Information	
Spout version	L - spout
Color	Decor steel
Type of material	Brass
Dimensions	
Tap hole diameter	35 mm
Cartridge dimension	35 mm
Height overall	284.0
Installation	
Fixation type	shank
Water supply hose connection	1/2"
Water supply hose length	450 mm
Product specifications	
Pressure	High Pressure
Version	Swivel
Tap operation	side lever
Tap rotation	360°
Product identification	
Product brand	FRANKE
Product family	Smart
Model range	Lina
Properties	
Eco water saving	no
Type of aerator	Honeycomb