Tap Lina Pull Out Nozzle Side HP CHR CN | 115.0635.337

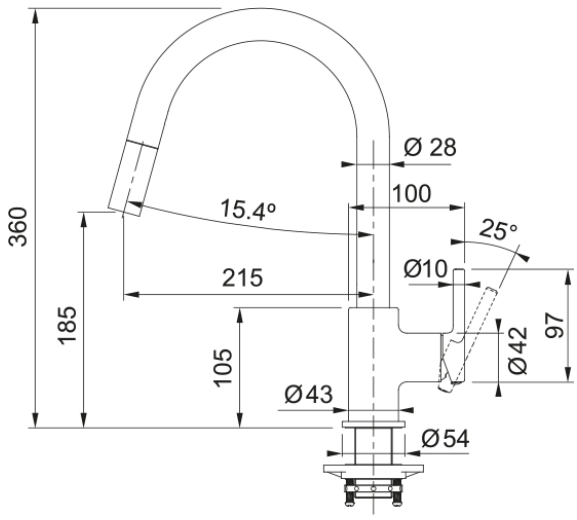

Tap Lina Pull Out Nozzle Side Lever HP CHR CN

Product Information	
Spout version	J - spout
Color	Chrome
Type of material	Brass
Flexible pullout hose material	Nylon black
Shower material	Plastic
Dimensions	
Tap hole diameter	35mm
Cartridge dimension	35 mm
Height overall	360.0
Installation	
Fixation type	Shank
Water supply hose connection	3/8"
Water supply hose length	450 mm
Product specifications	
Pressure	High pressure
Version	Pull out
Tap operation	Side lever
Tap rotation	150°
Product identification	
Product brand	Franke
Product family	Smart
Model range	Lina
Properties	
Eco water saving	No
Type of aerator	Aerated