# UBG 620-86 | 114.0695.228

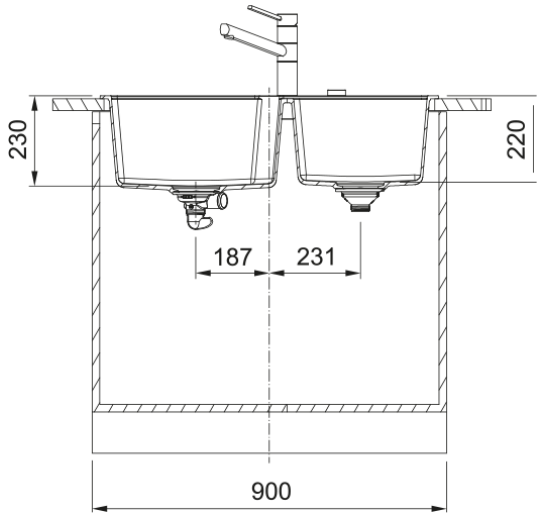


R15

| | |
|---|---|
| | |
| | |
| | |
| | 2 |
| | |
| | |
| | |
| | 860.0 |
| | 500.0 |
| 1 | 432.0 |
| 1 | 425.0 |
| 1 | 230.0 |
| 2 | 341.0 |
| 2 | 364.0 |
| 2 | 220.0 |
| | 840.0 |
| | 480.0 |
| | |
| | 90 cm |
| | |
| | |
| | 3 1/2" |
| | |
| Active Twist | |
| | |
| | |
| | FRANKE |
| | Maris |

| | |
|---|---|
| | Urban |
| LOGO | CE |
| LOGO | UKCA |
| | |
| | |
| | |
| | |
| | |
| | |
| | |
| | 3- |
| | |