UBG 620-78 | 114.0695.225

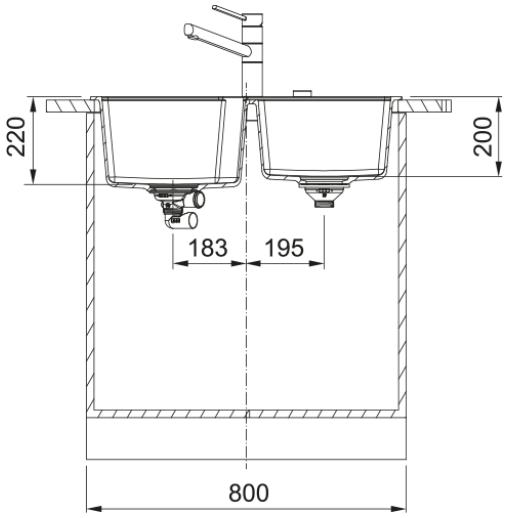

R15

	2
	780.0
	500.0
1	359.0
1	425.0
1	220.0
2	333.0
2	364.0
2	200.0
	760.0
	480.0
	80 cm
	3 1/2"
Active Twist	
	FRANKE
	Maris

	Urban
LOGO	CE
LOGO	UKCA
	3-