UBG 610-78 | 114.0695.223

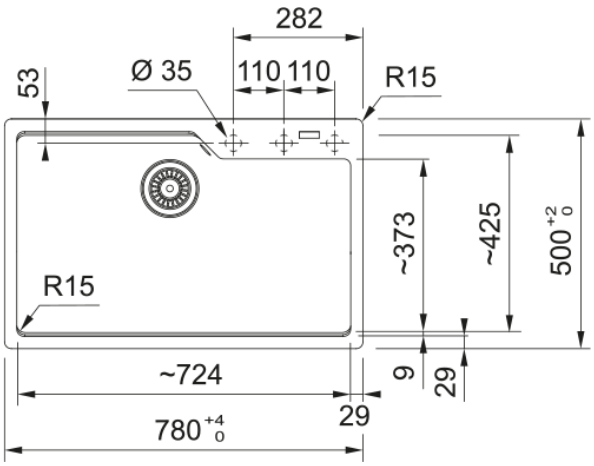

R15

	1
	780.0
	500.0
1	724.0
1	425.0
1	230.0
	760.0
	480.0
	80 cm
	3 1/2"
Active Twist	
	FRANKE
	Maris
	Urban
LOGO	CE
LOGO	UKCA

3-