FIH3226 | 108.0537.185

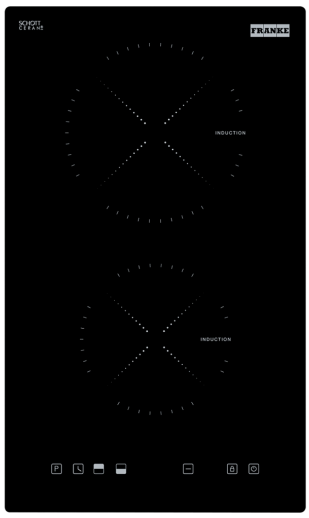

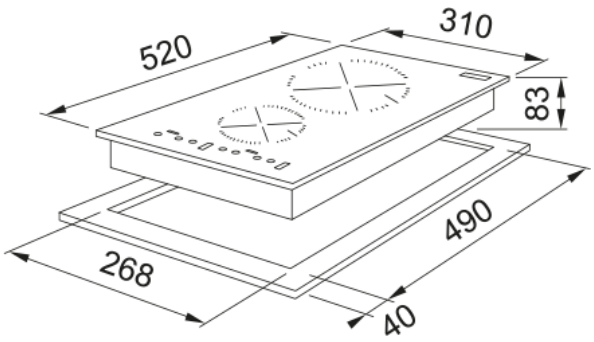

LED92.0kW/1.4kW0-99

	30X50
	380.0
	270.0
	490.0
	3.4
	220-240 V
	50-60
W	1400
W	2000
	FRANKE
UI	
	2