JZT-FG8288NX | 106.0698.047

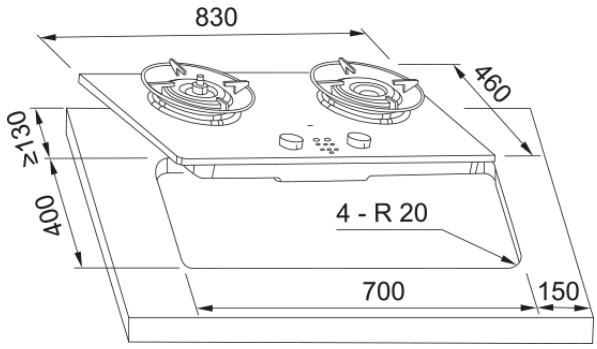

70% NTC3830mm 80-180LED360°Orkli - 5.2kW - 5.2kW

	70x40
	10.4
	220 V
	50
	2
	FRANKE
	Mythos
UI	
	2.0
	(IR)