JZT-FG8268NX | 106.0698.046

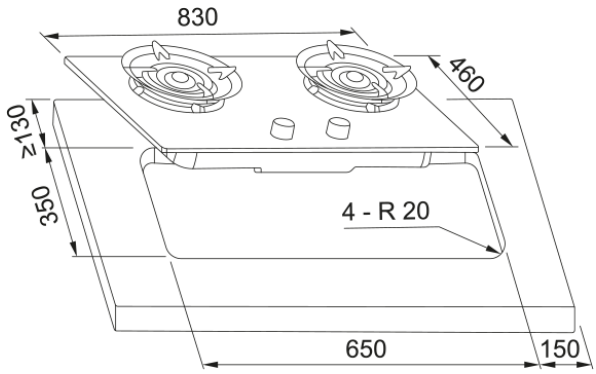

70%∠35° 830mm80-180LED225° Orkli - 5.2kW - 5.2kW

	65x35
	10.4
	220 V
	50
	2
	FRANKE
	Mythos
UI	
	2.0
	(IR)