JZT-FG8266NX | 106.0698.045

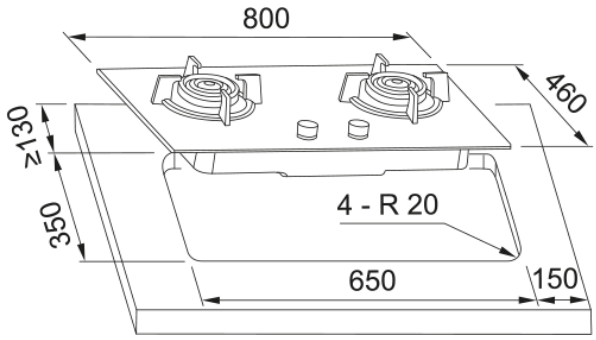

∠35° 800mm8225°Orkli - 5.2kW - 5.2kW

	65x35
	10.4
	220 V
	50
	2
	FRANKE
	Smart
UI	
	2.0
	(IR)