JZT-FG8312 | 106.0535.193

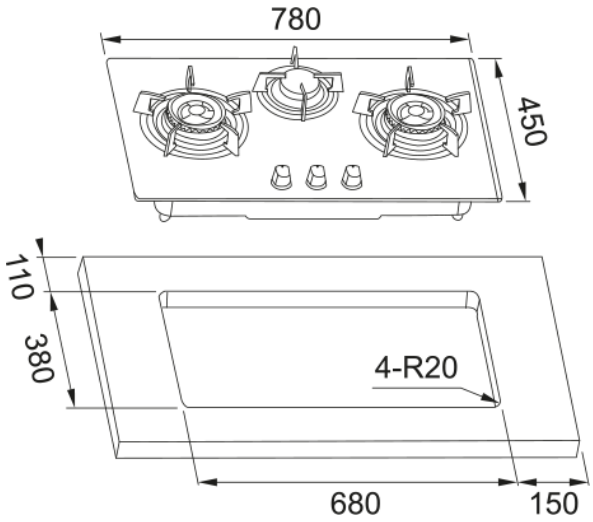

35°8mm ()4.5kW 1.4kW 4.5kW (12T)

	/
	80X40
	430.0
	680.0
	380.0
	800.0
	480.0
	10.4
	220 V
	50
	3
	FRANKE
UI	

3.0