Lugano LUX 610 | 101.0041.818

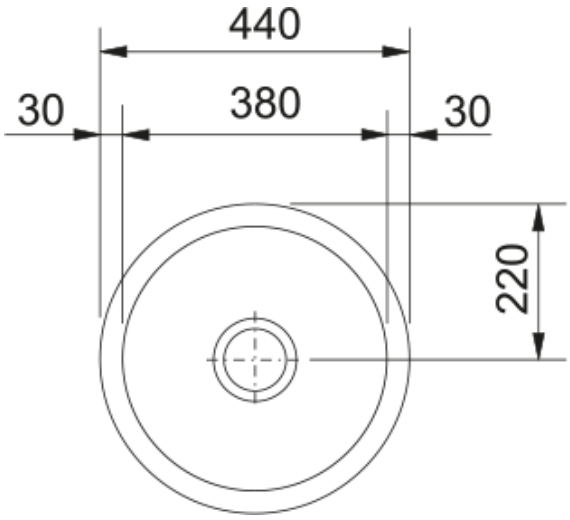

304DDQ

	1
	440.0
	440.0
1	380.0
1	380.0
1	190.0
	426.0
	426.0
	40 cm
	3 1/2"
	FRANKE
	Smart
	Lugano
LOGO	CE