ANX221LHD Aton Double Bowl Sink | 127.0283.698



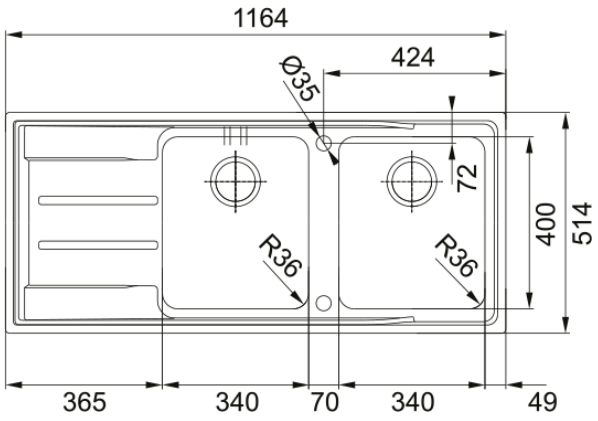

This Franke sink will add contemporary flair to your kitchen space. Boasting a double bowl configuration, you can wash in one bowl and rinse in the other.

Aspect	
Sink type	Sink (w/ drainer)
Material type	Stainless steel
Number of bowls	2
Colour	Steel
Finish	Brushed
Overflow	Yes
Dimensions	
Overall length	1164.0
Overall depth	514.0
Length	340.0
Depth	400.0
Height	190.0
Bowl 2: length	340.0
Bowl 2: Width	400.0
Bowl 2: height	190.0
Installation	
Cabinet size	80 cm
Product features	
Installation type	Flushmount
Waste outlet	3 1/2"
Position of drainer	Left hand side drainer
Product identification	
Brand	FRANKE
Product family	Maris
Family	Aton
Approval logo	CE
Properties	

Drainer	1
Reversible	No
Tap ledge	Yes
Waste kit	Yes
Waste kit type	Manual
Plumbing kit	No
Tap holes	2
Soap dispenser hole	No
Drain cover	no