ANX211LHD Aton Single Bowl Sink | 127.0283.678



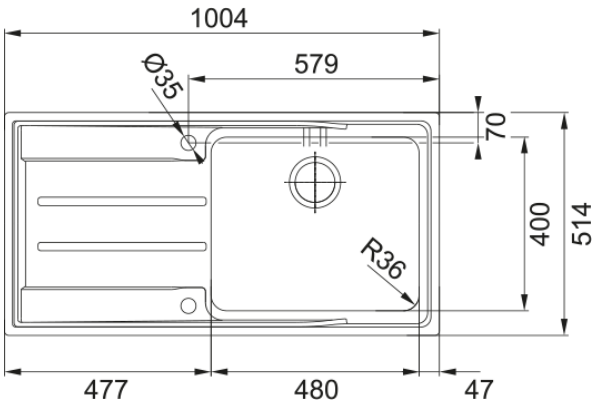

This Franke sink will make an elegant statement in any kitchen. With a 36-litre capacity, the single bowl can accommodate large dinner plates. Available in left hand and right hand drainer configuration.

Aspect	
Sink type	Sink (w/ drainer)
Material type	Stainless steel
Number of bowls	1
Colour	Steel
Finish	Brushed
Overflow	Yes
Dimensions	
Overall length	1004.0
Overall depth	514.0
Length	480.0
Depth	400.0
Height	190.0
Installation	
Cabinet size	60 cm
Product features	
Installation type	Flushmount
Installation type	Topmount
Waste outlet	3 1/2"
Position of drainer	Left hand side drainer
Product identification	
Brand	FRANKE
Product family	Maris
Family	Aton
Approval logo	CE
Properties	
Drainer	1
Reversible	No

Tap ledge	Yes
Waste kit	Yes
Waste kit type	Automatic-twist knob
Plumbing kit	No
Tap holes	2
Soap dispenser hole	No
Drain cover	no