Devices heights:
with feet 7 mm (Option):
Height 750 + 7 = 757**

with feet 40 mm (Standard):
Height 750 + 46 = 796**

Adjustable feet 70 mm (Option):
Height 750 + 71 = 821** (to 831**)

Adjustable feet 100 mm (Option):
Height 750 + 100 = 850** (to 860**)

**The optional bean hopper 2 x 600 g
reduces the Device height 52 mm.

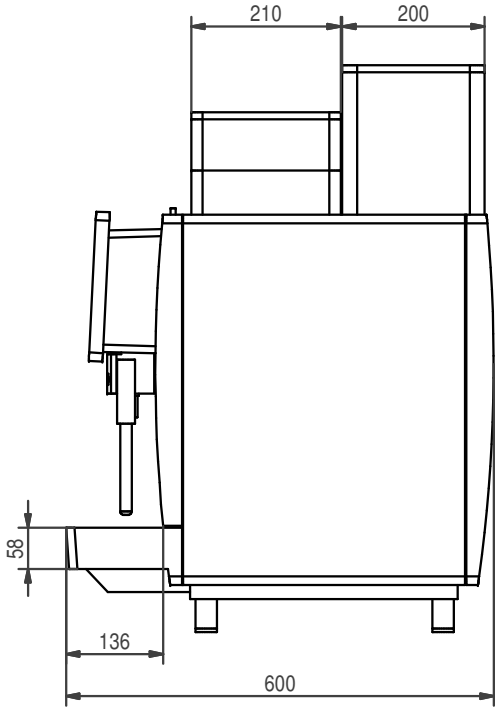

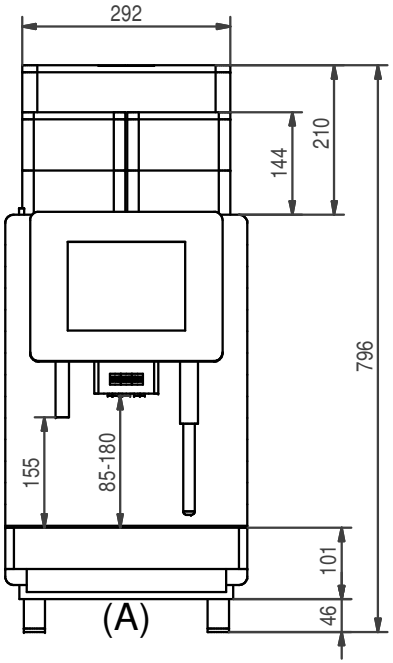

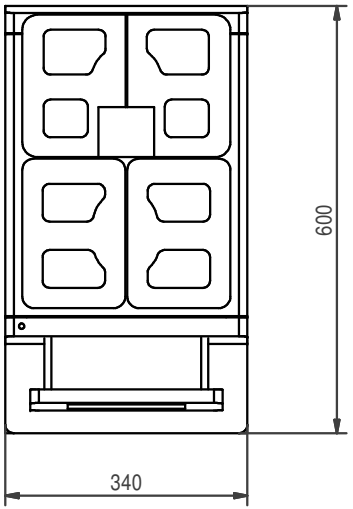

Technical data:

(A) A600 MS EC:	200 V, 2L PE, 2450 W, 15 A, 50-60 Hz - JP	
(Net weight 38 kg)	200-220 V, 2L PE, 4500-5300 W, 30 A, 60 Hz - US/CR/PA	
	220 V, 2L PE, 2400 W, 16 A, 60 Hz - BR	
	220-240 V, 1LNPE, 2100-2300 W, 10 A, 50-60 Hz - CH/GB/EU/CN	
	220-240 V, 1LNPE, 2400-2800 W, 16 A, 50-60 Hz - CH/GB/EU	
with mains water connection:	Inlet hose 8 x 1500 mm, union nut G3/8"	
	Waste water hose 20 x 2000 mm	
with internal water tank:	4,0 liters, level monitoring, filter cartridge Claris	
	Drip tray 3,0 liters, removable, level monitoring	

Franke Kaffeemaschinen AG
Franke-Strasse 9
CH-4663 Aarburg
Telefon: +41 62 787 3607
E-Mail: kmch@franke.com
Internet : www.franke.com

These drawings and specifications are the property of Franke Technology and Trademark Ltd. and shall not be reproduced, copied or transfered to any third party without the prior written permission of Franke Technology and Trademark Ltd., Hergiswil, Switzerland

Unit: mm	Scale: NTS	Description: TD_A600MSEC_en				
Drawn: MB002	28.01.2020					
Modified: MB002	28.01.2020					
Checked						
ECN: 500000001512		Document ID - Version: 20174424-01	Revision	Status: 15	Sheet / Sheets: 1 /2	Format: A3
Article Number						

Installation notes on site:

WW1: Option waste water - DN50 funnel trap ventilated - A600 MS EC (A)
for drainage hose

FW1: Option mains water connection G3/8A external thread - A600 MS EC (A)
Check valve, filter and aquastop - recommendation
Water pressure 80-800 kPa (0,8-8,0 bar)
Flow rate: >0,1l/sec. - Water temperatur <25°C
Water hardness: 4-8°dH; 7-14fH; 70-140ppm (mg/l)
Carbon hardness: 3-6°dH; 50-105ppm (mg/l) - pH-value: 6,5-7,5
Chlorine content: <0,5mg/l - Chloride content: <30mg/l
Elektrical conductivity: 50-200µS/cm - Iron content: <0,3mg/l

E1: Soket with RCD (residual current device) - A600 MS EC (A)
200 V, 2L PE, 2450 W, 15 A, 50-60 Hz - JP
200-220 V, 2L PE, 4500-5300 W, 30 A, 60 Hz - US/CR/PA
220 V, 2L PE, 2400 W, 16 A, 60 Hz - BR
220-240 V, 1LNPE, 2100-2300 W, 10 A, 50-60 Hz - CH/GB/EU/CN
220-240 V, 1LNPE, 2400-2800 W, 16 A, 50-60 Hz - CH/GB/EU

CC1: Option container for coffee-grounds ejection - A600 MS EC (A)

WF1: Option water filter - A600 MS EC (A)

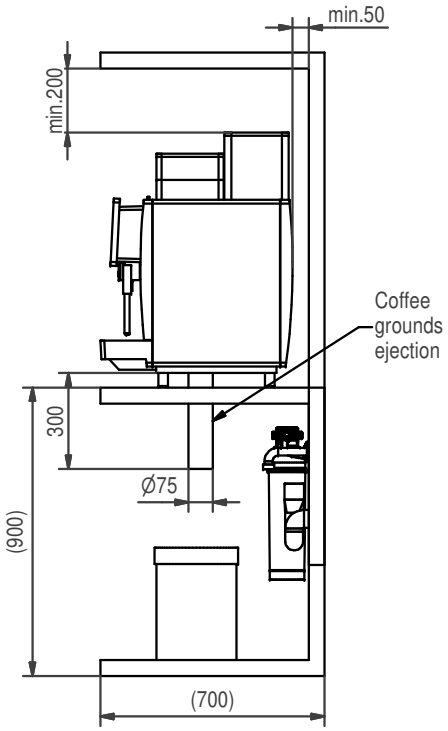

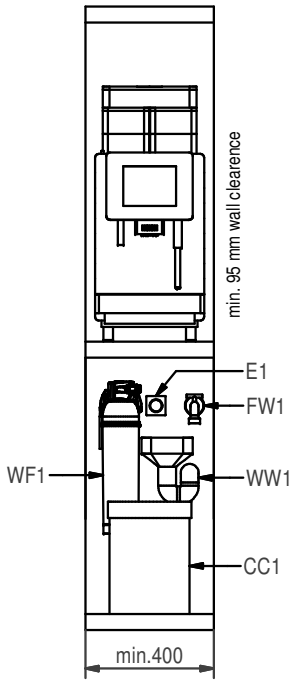

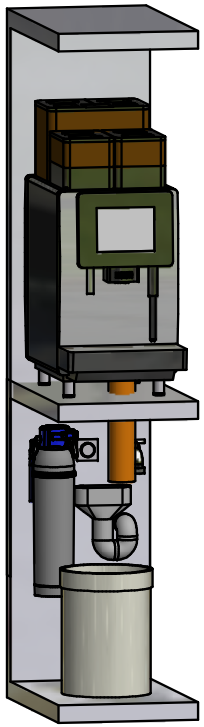

Installation requirements:
Our delivered appliances are ready for operation. They have to be installed on a flat surface. First the preparations for the connections of water and electricity must be complete. Distance max. 1 m up to the device. This preparation-works must be performed by qualified specialists in accordance with applicable regulations. The coffee machine is intended exclusively for operation in interior rooms.
Ambient temperatur: 5°C - 32°C.
Humidity: max. 80%

Positions:
Pos. 1) 1x Drilling
- Supply lines - A600 (A)
Pos. 2) 1x Drilling (Option)
- Coffee-grounds ejection - A600 (A)
Pos. 3) 4x Surface
- Equipment feet - A600 (A)

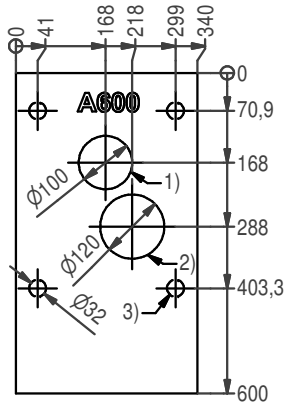

Franke Kaffeemaschinen AG Franke-Strasse 9 CH-4663 Aarburg Telefon: +41 62 787 3607 E-Mail: kmch@franke.com Internet : www.franke.com	Unit mm	Scale NTS	Description TD_A600MSEC_en	
	Drawn	MB002 28.01.2020		
	Modified	MB002 28.01.2020		
	Checked			
These drawings and specifications are the property of Franke Technology and Trademark Ltd. and shall not be reproduced, copied or transfered to any third party without the prior written permission of Franke Technology and Trademark Ltd., Hergiswil, Switzerland	ECN	500000001512	Document ID - Version 20174424-01	Revision / Status 15 / Sheet / Sheets 2 /2 / Format A3
	Article Number			