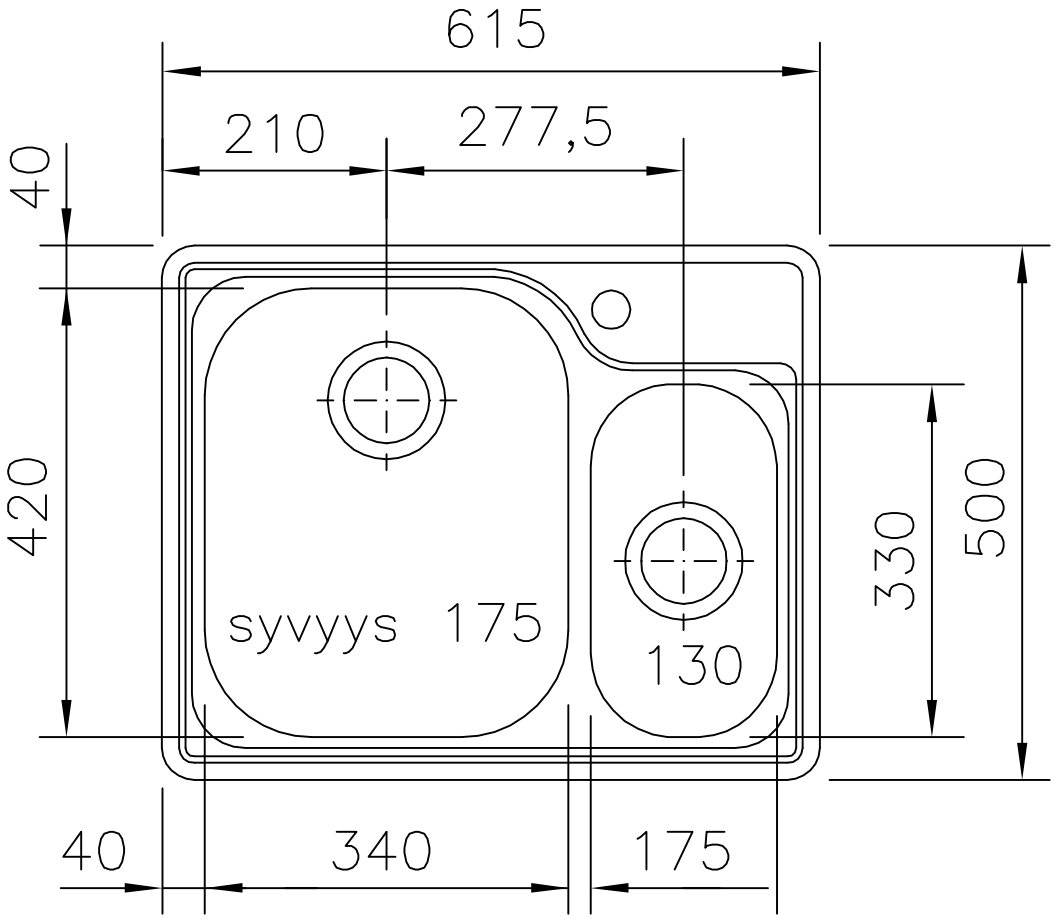
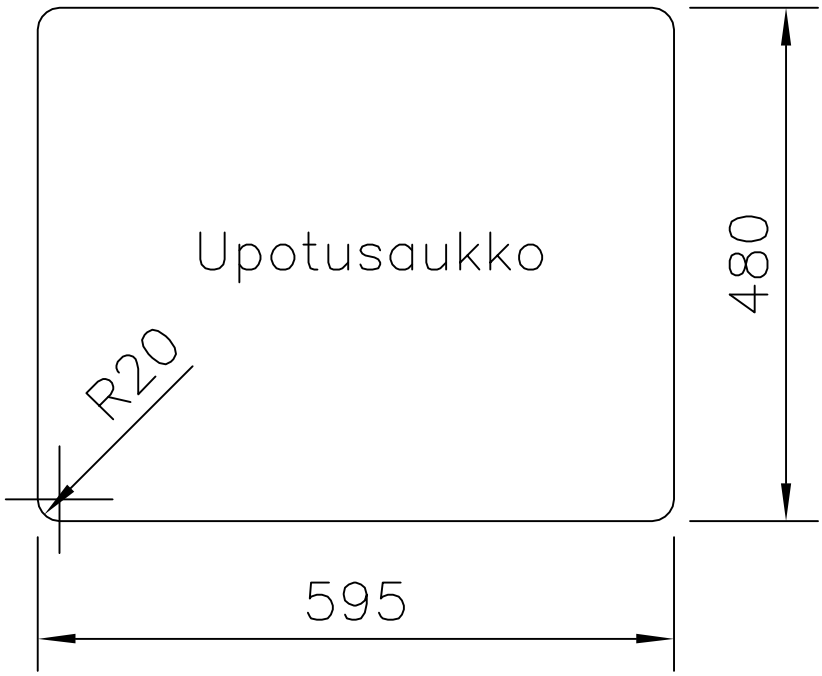
355543 Compact Nova CN 660